Committee Report : JCI- TC072A

# Technical Committee on Seismic Resistance of Pilotis Structures and Rigid Frame Viaducts and the Seismic Design (Soft-story Design)

Kazuo SUZUKI, Manabu YOSHIMURA, Norio INOUE, Hiroshi KURAMOTO, Yukihiro TANIMURA, Tomohisa MUKAI

**Abstract**

During the 1995 Hyogoken-Nambu Earthquake, pilotis buildings suffered greater damage than other concrete buildings. Among civil structures, damage to rigid-frame viaducts was also notable. Subsequent earthquake-resisting measures have not been sufficiently progressed for these structures. As it stands, engineers are still struggling for countermeasures. The Committee squarely addressed this subject, explored effective solutions, and presented techniques to achieve such solutions

Keywords: pilotis structure, retrofitting method, rigid-frame viaduct, seismic isolation, seismic safety, vibration control

## 1. Introduction

### 1.1 Definitions

As defined later in this paper, pilotis structures can be described from the aspect of vibrational science as structures showing the dynamic behavior of a one-lumped-mass system. In architecture, these are so-called pilotis buildings having few or no walls on the ground floor. In civil engineering, these are represented by rigid-frame viaducts. For the dynamic behavior of a one-lumped-mass system, the rigidity of the first (bottom) layer needs to be sufficiently lower than that of the upper layers. Note that if the pilotis story has walls and their amount and layout increase the rigidity of the story in the beam direction, then only the ridge direction of the story forms a pilotis structure (unidirectional pilotis).

### 1.2 Problems

Because of the particular effectiveness of the space utility of the pilotis floor, pilotis buildings are strongly in demand in society and are found in many apartment houses and office buildings.

However, as demonstrated by their calamitous damage due to 1995 Hyogoken-nambu

Earthquake, seismic safety of pilotis structures is far from sufficient. The damage ratio was also highest among other types of structures. Yet no effective seismic measures or seismic design method have been present. Though a number of problems have to be solved before establishing such measures and design methods,
during a major earthquake in the future,
the aspect of structural safety, which is directly related to its judgment by society.

### 1.3 Activities of the Committee

The Committee, which was organized in these circumstances, aims to consolidate valuable research data dispersed in various academic societies to establish a seismic design method for this type of structure including structural construction and execution methods, thereby meeting the strong demand from society and minimizing future earthquake damage. The activities of the Committee were divided into four working groups (WGs) as shown in **Table 1.1** (Composition of the Committee). These were referred to as follows:
Architectural WG 1, which investigated the seismic safety of existing pilotis structures;
Architectural WG2,
structures;
Architectural WG3,
built structures; and
Civil engineering WG, which investigated the measures against earthquakes of civil structures in regard to structure,

Over the last two years,
problems related to pilotis structures from the standpoint of earthquake disaster prevention and achieved an effective summary, .

Investigation into seismic design methods for this type of structure provides a new perspective for structures in general. It is therefore expected to contribute to the review of current design methods.

### 1.4 Bases and outlines to solutions (Examples of policies)

Success case (**Figure 1.1**): Olive View Hospital destroyed by the 1971 San Fernando Earthquake. It was a failure in general terms but provided an extremely useful "special solution" – a "soft-story" structure having confined (laterally confined) columns with high deformability on the first layer.

Policy 1: The goal of the design of pilotis structures should be the current seismic

base-isolation structure with a design concept of cutting or reducing the input earthquake energy by making the pilotis story serve as a soft story (base-isolated story). It is extremely difficult to reach a solution from the "all story yielding design."

Policy 2: **Figure 1.2** shows an example of a soft story (base-isolated story). If the building has a basement, fail-safe measures can be taken by making the basement serve as a soft story and extending the floor beams of the ground floor to the peripheral walls of the basement. Bracing the basement with prestressing steel also provides high restorability. The damping function should be concentrated on this story.

Policy 3: The columns of a pilotis story should be sufficiently confined. Such a pilotis story can withstand loads with an inter-story drift (R) of 1/15 to 1/10 repeated some dozen times.

Policy 4: An input ground motion of level 3 should also be considered. The cross-sectional dimensions should be determined under Level 2, and Level 3 applied for the design of deformability. The safety margin of deformation should be provided by calculating the ultimate deformation.

Other point 1 (Benefit): Since a structure designed by these policies can be dynamically regarded as a one-lumped-mass system, it can be easily investigated by elasto-plastic response analysis in various ways.

Other point 2 (Benefit): These policies allow engineers to easily design a structure with consideration to restorability with little damage to the upper floors during an earthquake similarly to base-isolated structures.

Other point 3 (Subject): The extent of the applicability of the concept of Policy 1 is a subject to be investigated in terms of the aspect ratio and number of stories.

**Figure 1.1: State of damage of Olive View Hospital in 1971 and large residual displacement of confined columns on the first story (residual displacement: approx. 50 cm, drift angle: approx. 1/5)[1-1)]**

## Table 1.1: Committee members

| | | |
|---|---|---|
| Chairman of Committee | Kazuo SUZUKI | Ex-Osaka University |
| Chief Secretary of Committee / Manager of Subcommittee | Yukihiro TANIMURA | Railway Technical Research Institute |
| Chief Secretary of Committee | Tomohisa MUKAI | Building Research Institute |
| Manager of Subcommittee | Manabu YOSHIMURA | Tokyo Metropolitan University |
| | Norio INOUE | Tohoku University |
| | Hiroshi KURAMOTO | Osaka University |
| Secretary of Subcommittee | Koichi KUSUNOKI | Yokohama National University |
| | Shigenobu INOUE | Asanuma Corporation |
| | Nobuaki HANAI | Kyushu Sangyo University |
| Member | Kazunori IWABUCHI | Kumagai Gumi |
| | Hideyuki KINUGASA | Tokyo University of Science |
| | Hiroshi KOMOTO | Mase structural design office |
| | Yasushi SANADA | Toyohashi University of Technology |
| | Tsutomu KOMURO | Taisei Corporation |
| | Takuya NAGAE | National Research Institute for Earth Science and Disaster Prevention |
| | Shuefeng WEN | Tepia Corporation Japan |
| | Kaoru KOBAYASHI | East Japan Railway Company |
| | Shigehiko SAITO | University of Yamanashi |
| | Yoshinori SHINDO | Japan Railway Construction, Transport and Technology Agency |
| | Masamichi SOGABE | Railway Technical Research Institute |
| | Koichi TANAKA | Obayashi Corporation |
| | Hisamichi HATTORI | Tokyu Construction Co., Ltd. |
| | Koji MATSUHASHI | Pacific Consultants Co., Ltd. |
| | Koji YOSHIDA | Central Japan Railway Company |
| | Tadatomo WATANABE | Hokubu Consultant Co., Ltd. |
| Cooperate Member | Zhenbao LI | Beijing University of Technology |
| | Hua MA | Beijing University of Technology |

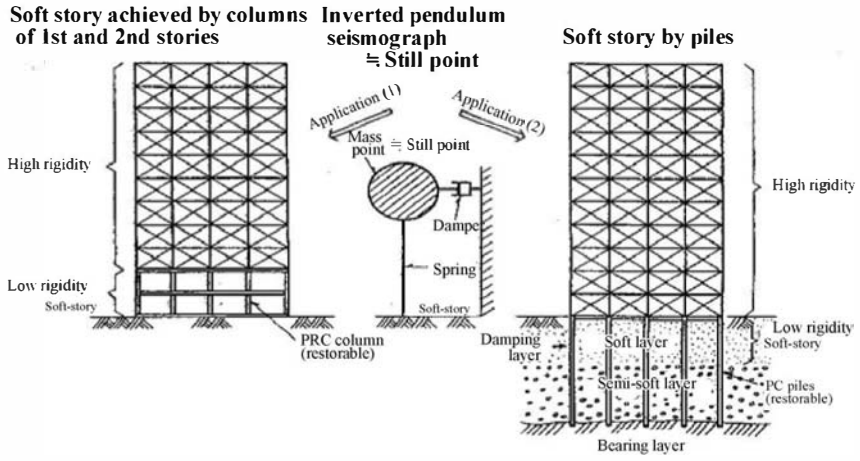


**(a) Concept of pilotis story (Soft-story)**

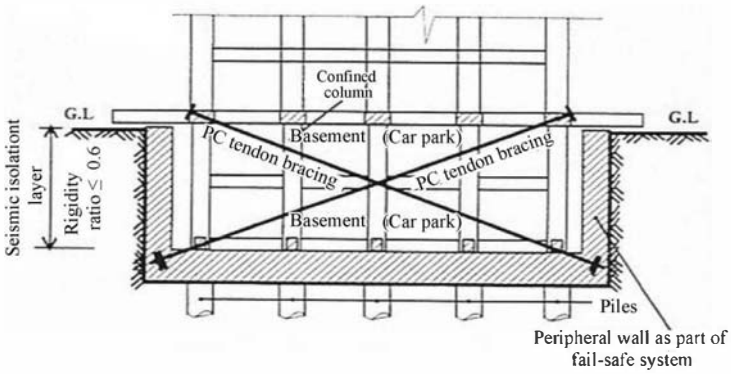


**(b) A fail-safe technique**

**Figure 1.2: Concept of pilotis story and application examples[1-1)]**

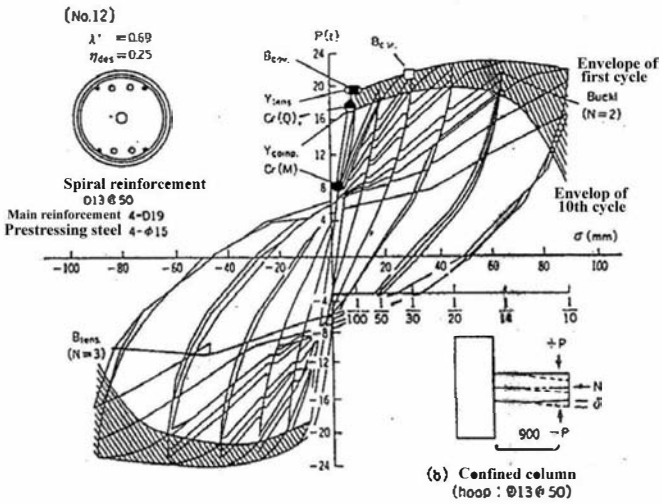


**Figure 1.3: Multiple alternate loading test on laterally confined column[1-2)]**

## 2. Brittleness of pilotis buildings and current design techniques (Architectural WG 1)

### 2.1 Definition of pilotis buildings

Generally speaking, a pilotis building has not been clearly defined, but can be defined in a manner of architectural planning as "a structure having through bearing walls primarily in the beam direction like a plank-like building for use as an apartment house where the whole or part of the bearing walls on the ground floor is absent to use the floor for facilities requiring large spaces, such as parking and stores."

The Committee decided to cover structures in which bearing walls for the second and upper stories cause the rigidity/bearing capacity of the first story to be relatively low, making the first floor prone to a mechanism (story yielding). The following case, for instance, is not included in the scope of the Committee's definition: a design case that does not permit the collapse of the pilotis floor, leading to a total collapse due to bending failure at the feet of bearing walls directly above the pilotis floor.

### 2.2 Summary of damage from past earthquakes

Nearly 88% of the total death toll in the 1995 Hyogoken-nambu Earthquake were caused by the collapse of buildings. Reinforced concrete buildings were also severely damaged. However, reinforced buildings conforming to the new earthquake resistance standards established in 1981 were scarcely damaged to a serious degree, excepting a small number, most of which were pilotis buildings damaged by the collapse of the pilotis story or failure of joints. Nevertheless, the damage of 90% of all pilotis structures designed in accordance with the current standards was minor or less[2-1)].

A damage case of a buildings that conformed to the new earthquake resistance standards but collapsed during the 1995 Hyogoken-Nambu Earthquake is introduced below along with the results of factor analysis[2-2)]

This is a 7-storied reinforced concrete apartment building with a pilotis story on the ground floor used as a parking lot. The insufficient strength of the first story compared with the upper stories caused a typical mechanism of first story yielding, resulting in failure of all columns and walls on the first floor, whereas the damage to the upper floors was marginal.

Several problems were found in the design of the north-south direction of this building including judgment errors. The first problem is non-bearing walls with slits on the upper stories. These served as bearing walls during the earthquake due to insufficient details of the slits. As a result, the strength of the first story was relatively lower than the upper stories. The

second problem stems from shear design in the secondary design. The overall rotation as a mechanism due to the uplift of the foundations and carried out the shear design of the first floor columns based on the shearing force assumed for the mechanism. In other words, the shear strength of most of the first floor columns was lower than the shearing force at the time of yielding at both ends. The third problem is related to the required horizontal bearing capacity assumed in the secondary design. The designer designed with Ds = 0.35, but failed to allow for an extra bearing capacity by the rigidity modulus. It is inferred that these three problems caused this building to collapse. The first and third problems caused the concentration of deformation on the first story (relatively insufficient strength), whereas the second problem led to the ductility to withstand that deformation not being ensured (insufficient ductility).

## 2.3 Results of survey regarding the method of designing pilotis buildings built by 2001[2-3)]

### (a) Purpose of case survey

A questionnaire survey was conducted regarding the design cases of pilotis buildings in 2001 with the aim of accumulating study data contributing to a future review of requirements for design and execution related to the pilotis structure.

### (b) Results of questionnaire survey

The number of responses totaled 88. Reinforced concrete buildings accounted for the largest part, being 62, followed by 22 steel-framed reinforced concrete buildings. Most buildings (77) were designed after the 1995 Hyogoken-nambu Earthquake. There buildings having 16 or more stories. This exceeding 45 m. The histogram peaks of the number of stories were at 7, 11, and 14. The number of spans in the ridge direction of the pilotis story was mostly 3 to 9. In the beam direction (pilotis direction), 1 span accounted for the most part (55 buildings), while 2-span and 3-span buildings totaled 25.

In regard to the presence of bearing walls in the pilotis direction of the pilotis story, the number of pure pilotis buildings was 8, being about 10% of the total. Few buildings had an eccentricity ratio exceeding 0.15, presumably due to the structural code requirements.

**Figures 2.1** and **2.2** show the histograms of the rigidity modulus of the pilotis story and the Ds for the beam direction design of the pilotis story, respectively. Few buildings have a rigidity modulus of 0.6 or less, suggesting that extras by the rigidity modulus are scarcely adopted in the design practice at the time of this survey.

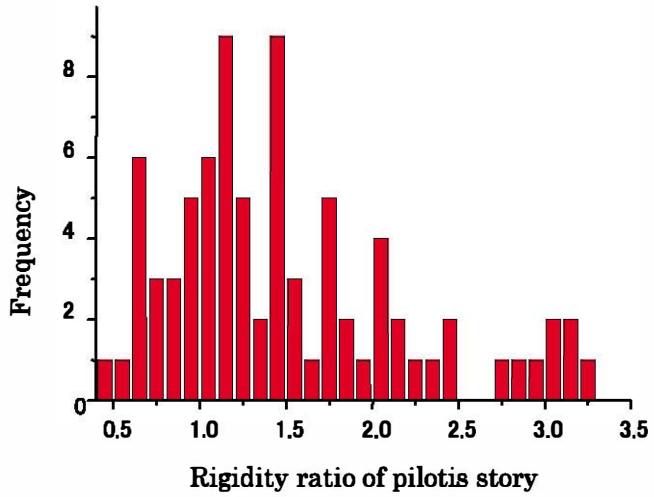


**Figure 2.1:**

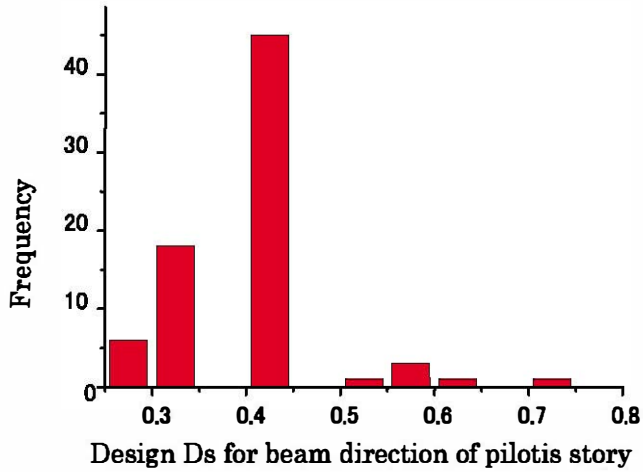


**Figure 2.2: Design Ds for beam direction of pilotis story**

## 2.4 Current assessment techniques for pilotis buildings and their problems

The assessment procedures and problems of each design technique are described as follows:

**(a) Routes 1, 2-1, 2-2,**

By routes 1, 2-1, 2-2, and 2-3, the design is required to meet the permissible stress calculation and satisfy equations 2-1, 2-2, or 2-3, where Aw, Ac, Z, W, and α denote the cross-sectional area of walls, cross-sectional area of columns, locational constant, weight of the building borne by each story, and $\sqrt{F_c/21}$, respectively. By routes 2-1, 2-2, and 2-3, the

design is required to be vertically and horizontally non-eccentric, with Fes being 1.0. Since route 2-3 is intended for a total collapse type, it does not cover pilotis buildings. Pilotis buildings have a problem that the penalty, Fs, based on the rigidity modulus for pilotis buildings does not always exceed 1.0.

$$\sum 2.5\alpha A_w + \sum 0.7\alpha A_c \geq ZWAi \qquad (2\text{-}1)$$

$$\sum 2.5\alpha A_w + \sum 0.7\alpha A_c \geq 0.75ZWAi \qquad (2\text{-}2)$$

$$\sum 1.8\alpha A_w + \sum 1.8\alpha A_c \geq ZWAi \qquad (2\text{-}3)$$

**(b) Route 3**

By route 3, the confirmation of the horizontal load-bearing capacity is required in addition to the permissible stress calculation. The horizontal load-bearing capacity required for each story is determined using such factors as structural characteristic coefficient, Ds. The values of Ds of a ductile frame structure and shear wall structure are normally 0.30 and 0.40, respectively. The Ds of a pure pilotis story is mostly 0.30, whereas that of the other stories is mostly 0.40. Pilotis buildings therefore have a problem that the horizontal load-bearing capacity of the pilotis story becomes lower than those of the other stories. Also, whereas the Ai distribution is generally employed for the external force distribution, the external forces are evenly distributed for a pilotis building after story yielding.

Since the 1995 Hyogoken-nambu Earthquake, the supplementary commentaries of technical standards basically prohibit the yielding or failure of a pilotis story. In regard to pure pilotis buildings, however, the story yielding of a pilotis story is permitted by using coefficient αp. Nevertheless, αp entails problems by being based on the law of constant energy and intended only for pure pilotis buildings.

**(c) Limit bearing capacity calculation**

Limit bearing capacity calculation is a method of calculating the response deformation and stress to the assumed ground motion level by comparing the performance curve of the building contracted to a one-degree-of-freedom system and the demand curve calculated from the magnitude of an earthquake. This method enables engineers to assess the concentration of deformation to the pilotis story in an explicit form.

However, this method is incapable of precisely evaluating asymmetrical vibration, the so-called one-sided vibration.

**(d) Diagnostic criteria for seismic resistance of existing buildings (Secondary diagnosis)**

In the widely used secondary diagnosis, the axial forces of pilotis columns are examined as "lower story columns without walls." Since the axial force is examined only in the span having walls within the structural pilotis plane, it is regarded as the "maximum assumed" axial force. For this reason, stress transfer through the slab is not considered.

## 2.5 Trial design and seismic response analysis

Using a basic model formulated based on an existing pilotis building (see the figure below), a case study was conducted by seismic response analysis while changing the cross-sectional area of columns and number of walls on the first floor to investigate the properties of pilotis buildings. The results are summarized as follows:

Outline of model building: A municipal housing-type model with a pilotis story on the first floor; 8 stories above ground with a penthouse story (9 stories for analysis); the first floor by steel-framed reinforced concrete construction and the upper floors by reinforced concrete construction; built in the first half of 1975 (before the new seismic design was implemented).

The analysis conditions and parameters are as follows:

Analysis conditions: Equivalent shear model, Takeda model, fixed foundations, and the standard three waves (El Centro-NS, Taft-EW, and Hachinohe-NS).

Analysis parameters: Number of walls in the pilotis story (0 to 6, **Fig. 2.3** shows the analysis results with 0 walls); cross-sectional area of pilotis columns; a conventional model, a model conforming to the new seismic design and current laws, etc.; input earthquake motion level; damping constant; and analysis program.

Conclusion: This building is nearly safe against level 1 and level 2 earthquakes. Strengthening of this building by confining columns will ensure safety against level 3 earthquakes (see **Figs. 1.2, 3.6**, etc.).

# 3. Seismic retrofitting of existing pilotis buildings (Architectural WG 2)

## 3.1 Principles

A large number of pilotis buildings built by the former seismic standards remain, with a substantial need for seismic retrofitting. However, the retrofitting of the pilotis floors is difficult in most cases from the aspect of architectural planning due to their use for parking, etc. Also, when the number of shear walls is reduced and their cross-sectional area is increased to resolve the discontinuity of load bearing capacity/rigidity, the shear walls could

generate torsional response to an earthquake motion in the range of causing plastic deformation and reducing their load-bearing capacity. Moreover, strengthening of the pilotis story may increase the response of the upper stories, making their load-bearing capacity insufficient. In view of these circumstances, the Committee proposed tecbniques to increase the seismic resistance by strengthening the pilotis story to an extent that does not significantly increase the response of the upper stories. Points to consider here include the improvement in the ductility and damping performance of the pilotis story, fail-safe measures, and imparting of restorability.

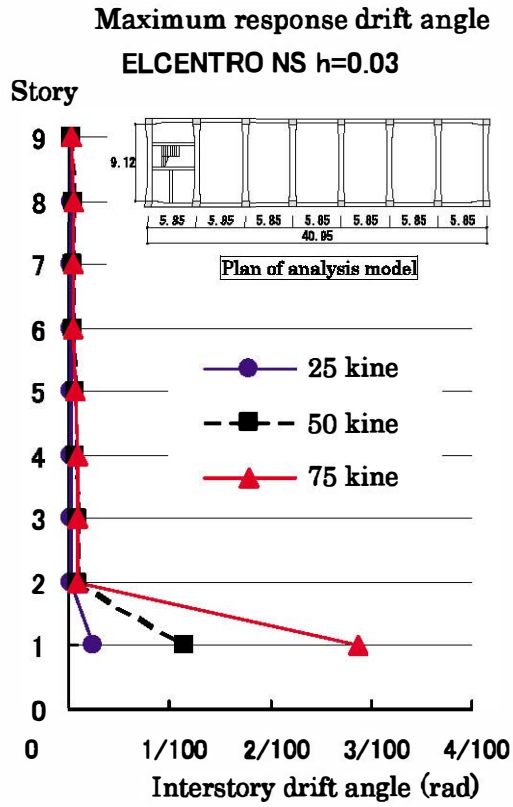


**Figure 2.3: Results of seismic response analysis**

## 3.2 Design procedures for seismic retrofitting

### 3.2.1 External damping

This is a tecbnique to increase the performance of existing buildings using damping members that are capable of efficiently absorbing energy. As shown in **Fig. 3.1**, hysteretic damping-type dampers made using low-yield point steel (LYP 100, 235) are installed in the pilotis plane with the aim of suppressing the response on the level of small response deformation in the low rigidity pilotis story by the hysteretic energy absorption of the dampers. Since the ends of each brace are fixed to the edges of reinforced concrete beams by

fixing steel anchorage plates using prestressing steel bars, the work is simple, with a minimum space being occupied by the bracing. The dampers can be dismounted and re-installed when the structural framing requires repair after an earthquake.

This system is applicable to existing reinforced concrete buildings with a high torsional strength and flexural strength of beam ends to minimize losses due to torsional deformation. Buildings in which the axial force cannot be retained after shear failure are out of the application scope of this system. The design of this system is carried out in two stages. In the first stage, the target plasticity ratio of the reinforced concrete structural framing is determined under the earthquake motion for consideration, and the amount of dampers necessary to achieve the target is determined. It is important here to consider the losses in the damper deformation components due to joint weaknesses and the torsional deformation of beams. In the second stage, attachments for the dampers are designed.

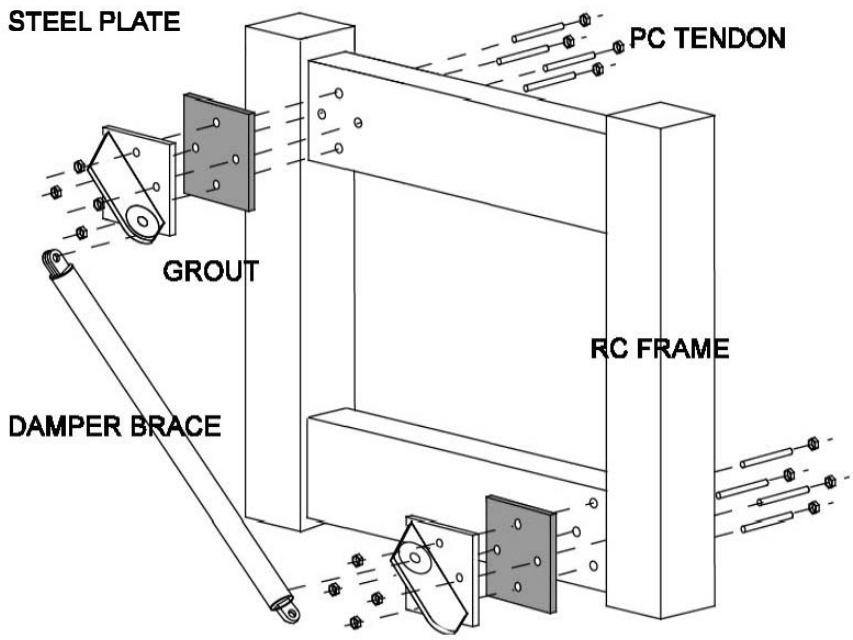


**Figure 3.1: External vibration control retrofitting**

### 3.2.2 Soft-landing isolation system

As shown in **Fig. 3.2**, this is a system whereby the seismic isolation of a pure pilotis building is achieved by fixing seismic isolation devices to the columns of the pilotis story by compressed connection to positively induce a story collapse in the story. Since this system improves the seismic performance of the entire building, it is effective for buildings where strengthening of the first story leads to insufficient capacities of the upper stories.

For the development of this system, a seismic isolation device was developed that scarcely protrudes from columns, while formulating design guidelines. The relationship between the planar configuration of strengths and distortion was investigated as well. The advantages of this system are that no strengthening of upper stories is necessary and that it permits a two-step investment; it protects human lives as a fail-safe system in the first step and, upon permanent restoration after landing, it initiates its original function of seismic isolation. Subjects of future investigation include the relationship between the order of column failure and the distortion response and seismic isolation of staircases and equipment (to what extent isolation is necessary).

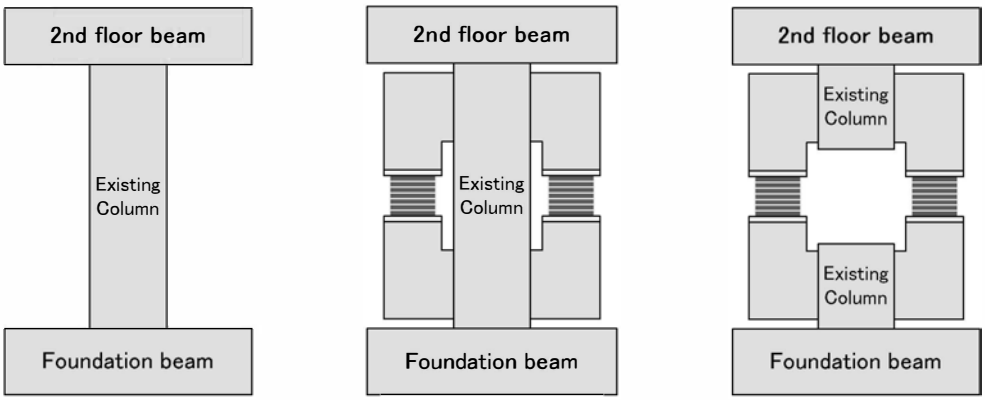


(a) Before retrofitting (b) Retrofitted (c) After an earthquake

**Figure 3.2: Soft-landing isolation system**

### 3.2.3 A system combining dampers and deformation controllers

Due to its low rigidity, a pilotis story is subjected to relatively large deformation. Addition of energy-absorbing devices is therefore effective in absorbing energy during a major earthquake without substantially increasing the rigidity of the pilotis story, while reductions in the seismic response similar to base isolation is expected against earthquake motions assumed in the design. Under an earthquake greater than assumed in the design, however, the risk of pilotis story collapse due to the P-Δ effect increases. The use of deformation controllers is therefore effective to be on the safe side. Note that this method is premised on the ductility design/strengthening of pilotis columns, as it requires high deformability of the columns. The Committee proposed two systems using oil dampers and steel dampers (**Figs. 3.3** and **3.4**, respectively).

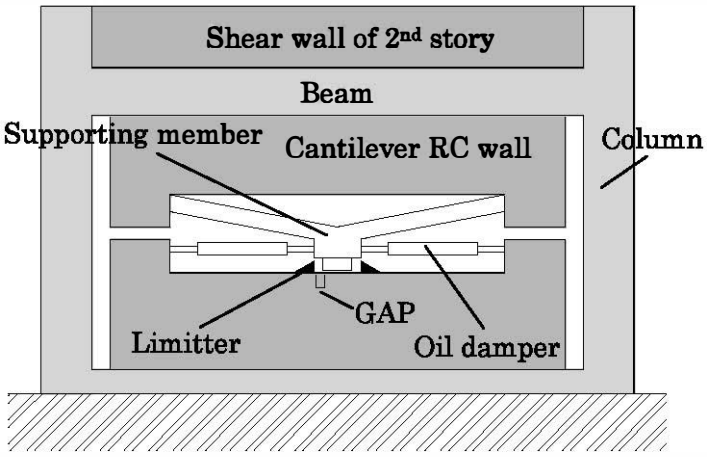


**Figure 3.3: Combination of oil dampers and deformation inhibitor**

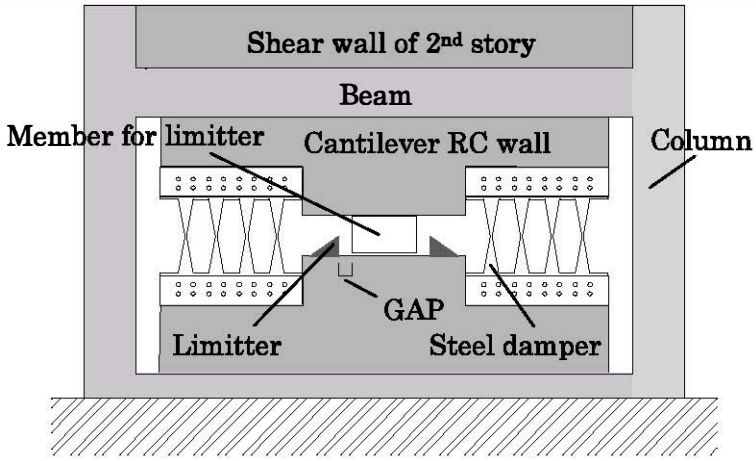


**Figure 3.4: Combination of steel damper and deformation inhibitor**

### 3.2.4 A vibration control system by viscous tuned mass dampers

A new vibration control system has been devised using viscous tuned mass dampers (**Fig. 3.5**). The Committee proposed a design method using this system for a pilotis story. This system employs an added vibration system tuned with the main structure. The added vibration system comprises equivalent masses, which are amplified by the rotation of the damper axes, and supports. The deformation of the viscous body of the damper is amplified to several times that of the interstory deformation, thereby effectively suppressing the response deformation of the main structure by a small damper amount. It has been proven effective for structures showing elastoplastic properties, such as reinforced concrete structures, provided the system constants are established so that the system is tuned with an equivalent rigidity corresponding to the interstory deformation of a level intended by the design.

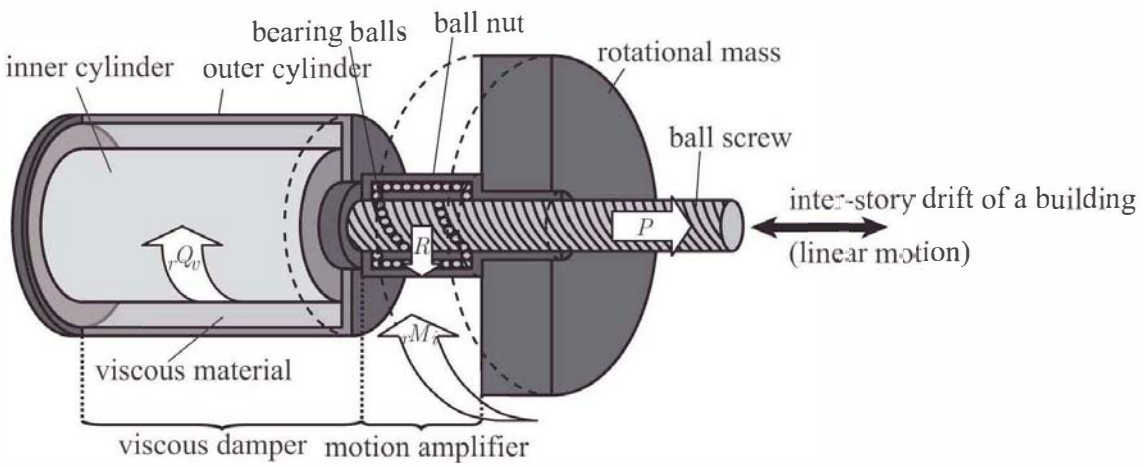


**Figure 3.5: Vibration control by viscous tuned mass damper**

## 3.3 Verification of seismic performance on a member level

### 3.3.1 Square steel jacketing of columns with tops and bottoms confined with angle steel

A retrofitting method for square-cross-section columns with steel jacketing has been in practical use. However, steel jacketing alone is not sufficient for confining concrete, leading to capacity losses at the time of large deformation due to concrete crushing at the ends of columns. It was thus considered effective to bind the column ends with angle steels in strengthening the confinement of concrete in the plastic hinge zones, thereby improving the ductility of the columns. The effectiveness of this technique was experimentally proven (**Fig. 3.6**). It was also shown that effective strengthening by this technique requires the following: (1) ensure a slit at each column end; (2) fill the space between the column and jacket with mortar having a strength equal to or higher than the strength of column concrete; (3) apply jacketing steel with a thickness of at least 6 mm.

### 3.3.2 Flexural retrofitting method using steel blocks

This is a method in which steel blocks are fixed to the top and bottom of a column by compressed connection to increase its effective depth against bending as flexural strengthening (**Fig. 3.7**). Also, the intermediate portion of the column is jacketed with steel to increase the shear capacity, axial capacity, and flexural ductility. This enhances the flexural capacity, shear capacity, axial capacity, and ductility performance of the column. The advantages of this method include the following: No new reinforcing bars or anchors are necessary; the work is relatively easy; and the capacity estimation is easier than strengthening with wing walls. Future subjects of investigation include the accuracy of shear capacity

estimation, grasping of the behavior of confined concrete, and the resulting increases in the shear forces in the central regions of beams

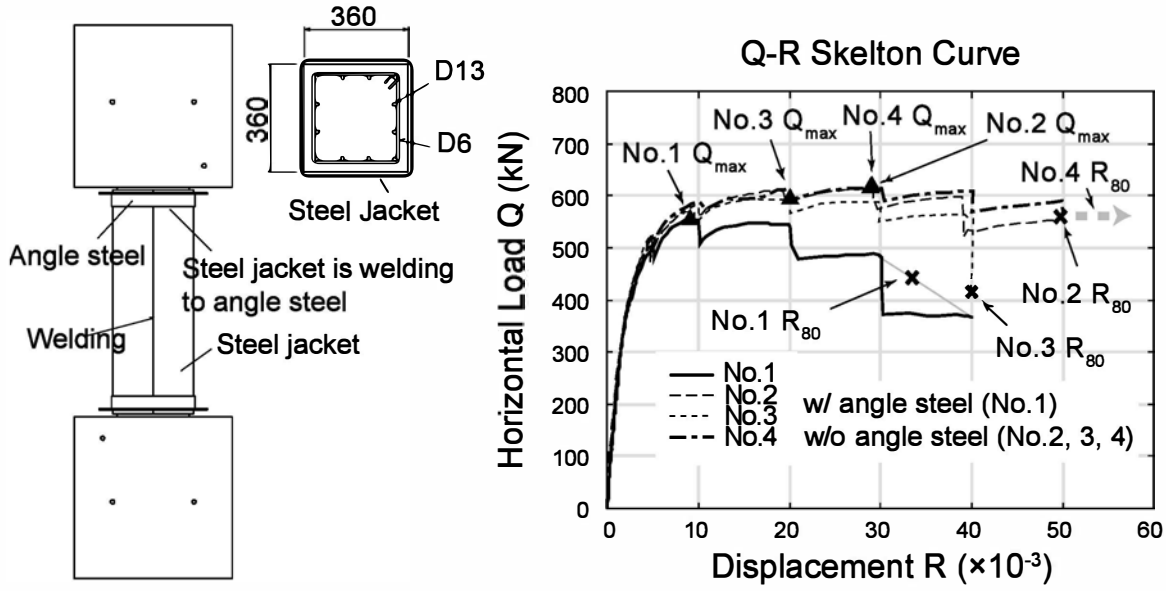


**Figure 3.6: Steel jacketing with top and bottom confined with angle steel[3-1)]**

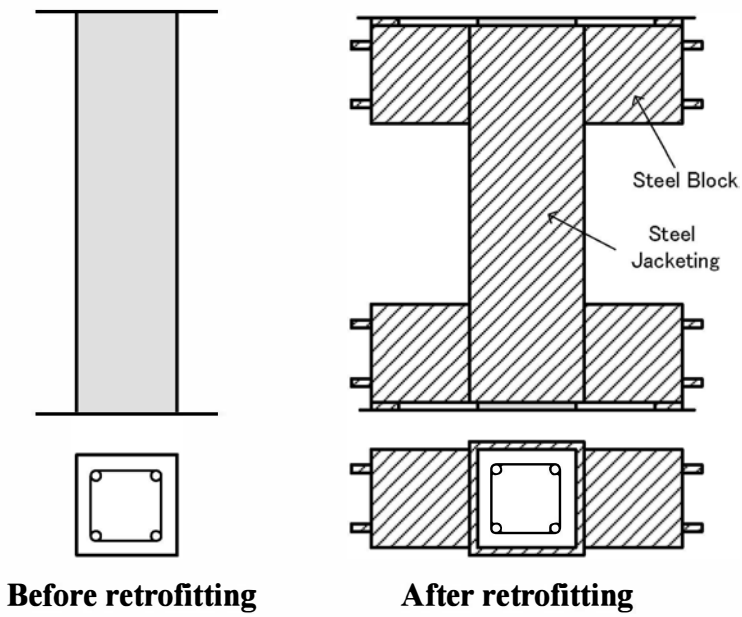


**Figure 3.7: Flexural retrofitting using steel blocks**

## 3.4 Conventional seismic retrofitting techniques

Various seismic retrofitting techniques proposed for buildings are summarized in the report as a review.

## 4. Investigation toward the establishment of performance-oriented design for pilotis buildings (Architectural WG 3)

### 4.1 Principles

Performance-oriented design was investigated with the aim of establishing a design procedure for pilotis buildings from the following aspects: (a) the background and current state of performance design; (b) basic considerations in performance-oriented design techniques; (c) characteristics of recent earthquake damage and functional restorability of buildings; and (d) economical efficiency and reparability (restorability).

In regard to (a) the background and current state of performance design,
Japan and the United States are examined.

In regard to (b) the basic considerations in performance-oriented design,
related to the steps of ground motion estimation,
estimation,

Meanwhile,
restorability of buildings were investigated based on damage cases of reinforced concrete buildings due to relatively large-scale earthquakes that struck various regions in Japan in recent years. As a result,
non-bearing walls and equipment that are not subjected to particular investigation regarding structural safety during the structural design are damaged,
the building. This phenomenon was found in not a few structures,
collapse. With this as a background,
the aim of clarifying the concept on the seismic resistance of buildings that are required to withstand a major earthquake with their functions intact. This was based on the results of a damage survey and seismic response analysis of a general hospital in Ojiya City,
a variety of useful pieces of information was obtained after 2004 Niigataken-Chuetsu Earthquake.

- Behavior of seismically isolated buildings during an earthquake and their functional maintenance
- Damage conditions of earthquake-resistant buildings built at different times and the causes of their damage by seismic response analysis
- Restoration and repair methods and costs for hospital buildings

This survey focused on hospitals,
high level of functions from immediately after being struck by an earthquake. The earthquake

damage conditions of hospital buildings and restoration of damaged segments were thus extracted and related to the input ground motion level to investigate their functional restorability after an earthquake. Subjects of future investigation were also extracted.

Also, the following investigation was conducted from the aspect of (d) performance-oriented design from the aspect of economic efficiency and reparability (restorability): There is a trade-off between safety and reparability. Functionality is also known to be traded off for safety and reparability. Trade-off examples may include the following: A reduction in the amount of walls to increase functionality reduces safety. Ductility design to compensate for a safety loss increases damage during an earthquake, while reducing the reparability. Increasing the function of a building, such as to increase the number of stories for efficient land use, makes it difficult to ensure safety through strength, requiring ductility design permitting damage during an earthquake.

Though the safety of pilotis buildings tends to be low, their reparability can be higher than beam-yielding-type buildings, while being highly functional by meeting social needs for car parking spaces. For achieving a city resistant to earthquakes, it is important to establish a seismic design method in consideration of the balance among the three trade-off performances: safety, functionality, and reparability. In this regard, seismic design of pilotis buildings is an interesting subject.

From these aspects, the "establishment of design objectives" and "indication of design objectives" are found to be particularly important for a pilotis building. When designing a pilotis building, its safety, reparability, and functionality should be expressed in three dimensions as shown in **Fig. 4.1**, with thorough investigation being carried out regarding the quality of ensured safety.

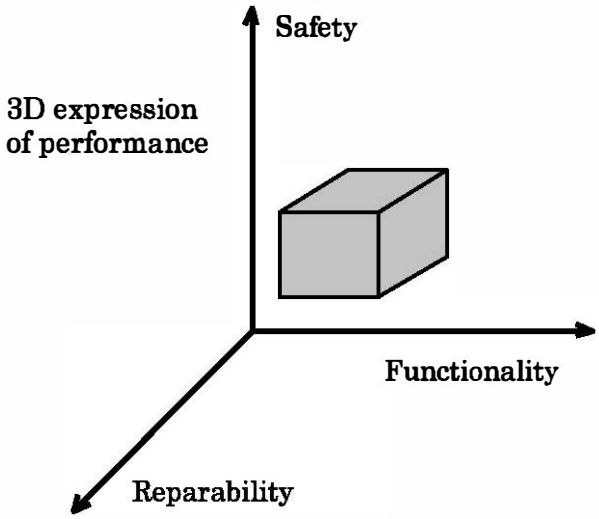


**Figure 4.1: 3D expression of reparability performance**

## 4.2 Seismic response evaluation

In this section, a specific seismic response evaluation procedure is presented for reinforced concrete pilotis buildings, and its validity is verified by comparison with the results of time history seismic response analysis.

The seismic response evaluation is carried out by the following procedure:

**(a) Mode-adaptive pushover analysis (MAP analysis)**

Static nonlinear incremental analysis[4-1)] (mode-adaptive pushover analysis, MAP analysis) is conducted. This is an analysis wherein the external force distribution is altered step by step according to the mode changes due to the plasticizing of the building, so that a horizontal force distribution form proportional to the first order mode is constantly applied regardless of the elastic/plastic state of the building. In this analysis, the framing should basically planar framing consisting of member models, and a structure model made by coupling member models assuming a rigid floor should be used. However, a (pseudo) 3-D frame model should be used when the accuracy of a planar model analysis is deemed insufficient due to the steric behavior of the structure. This may include the case of torsional displacement due to eccentricity and the case where the stress of perpendicular beams or walls is unignorable because of the longitudinal deformation of columns or the end columns of bearing walls.

**(b) Contraction of the building to an equivalent one-degree-of-freedom system**

The structural characteristic curve ( $S_a - S_d$ curve) representing the structural performance of the building is determined by the equations given below using the relative

deformation of the $i^{th}$ story with respect to the ground floor level, $\delta_i$, the external force acting on the $i^{th}$ story, $P_i$, and the base shear, $Q_B$, at each loading step of MAP analysis.

$$S_a = \frac{\sum_{i=1}^{N} m_i \cdot \delta_i^2}{\left(\sum_{i=1}^{N} m_i \cdot \delta_i\right)^2} \cdot Q_B \qquad S_d = \frac{\sum_{i=1}^{N} m_i \cdot \delta_i^2}{\sum_{i=1}^{N} P_i \cdot \delta_i} \cdot S_a \qquad \text{(4-1 a, b)}$$

where $N$ is the mumber of stories and $m_i$ is the mass of the $i^{th}$ story.

**(c) Calculation of equivalent viscous damping constant of the building**

The $S_a - S_d$ curve determined in step (b) above is modeled into an appropriate bilinear curve to define the equivalent yield deformation. By using the plasticity ratio at the response point corresponding to this, $\mu$, the equivalent viscous damping constant, $h$, of the entire building is determined as follows:

$$h = \gamma_1 (1 - 1/\sqrt{\mu}) + 0.05 \qquad \text{(4-2)}$$

where $\gamma_1$ may be assumed to be 0.25.

**(d) Calculation of the response value of the equivalent one-degree-of-freedom system**

In consideration of the equivalent viscous damping constant, $h$, determined in step (c) above, the ground motion for verification (acceleration response spectrum) is multiplied by the damping correction factor by the following equation:

$$F_h = \frac{1.5}{1 + 10h} \qquad \text{(4-3)}$$

The intersection of this spectrum and the $S_a - S_d$ curve determined in step (b) above is determined to calculate the response value of the equivalent one-degree-of-freedom system.

Note that iteration is necessary for determining the response value by steps (b) to (d).

**(e) Calculation of response value for each member in each story and verification of safety for these limit response values**

The loading steps corresponding (or nearest) to the response values (intersections) obtained in step (d) on the $S_a - S_d$ curve are determined to obtain the corresponding response value of each story from the MAP analysis results.

In addition, it is verified based on the MAP analysis results that the deformation of each story or the stress/deformation of each member is within the respective limit value.

## 4.3 Database for damage estimation

### (1) Introduction

Accurate estimation of damage to members, particularly columns, and ensuring their deformation performance are keys for a building to meet the performance requirements. An enormous number of horizontal loading tests on columns have been conducted, with test data being accumulated, but have not been systematically organized. This section attempts to relate the details of columns in the accumulated data to their plastic deformation capabilities and various limit states.

### (2) Database

Specimens were extracted from test reports appearing in the JCI Annual Conference Proceedings published from 1991 to 2008 and organized into a database. In consideration of the investigation into performance as pilotis columns, the specimen data were extracted based on the following aspects:

- In view of the fact that pilotis columns are prone to high axial forces under variable axial forces during horizontal loading, loading test data under variable axial forces or constant axial force with an ax [illegible].
- Pilotis columns are not short columns, since no partial walls are connected to pilotis columns. Therefore, test data of columns with a shear span-depth ratio of not less than 1.5 should be collected. Columns having wing walls should be excluded.
- Assuming buildings of a normal scale, test data with a concrete strength of around 60 MPa or less should be collected.

### (3) Example of data analysis

The relationship between the specifications of specimens and their deformation performance was analyzed regarding specimens that underwent flexural failure or shear failure after flexural yielding among those collected in the database. **Figure 4.2** show an example of the relationship between the amount of shear reinforcement and the capacity loss ratio at a drift angle of 1/50 (corresponding to a plasticity ratio of 3 when the yielding drift angle is assumed to be 1/150) of specimens extracted from papers published from 2003 to 2008. Specimens that underwent shear failure are also plotted in the figure for comparison. Note that the capacity loss ratio is defmed here as the ratio of the capacity at a drift angle to the maximum capacity.

It is not appropriate to hastily conclude, as the shear margin also depends on the axial force and tensile reinforcement ratio, but within the range presented herein, a specimen tends

to undergo flexural failure when $p_w\sigma_{wy}$ roughly exceeds 2. Similarly, it scarcely suffers a significant capacity loss at a drift angle of 1/50 when $p_w\sigma_{wy}$ exceeds 3.

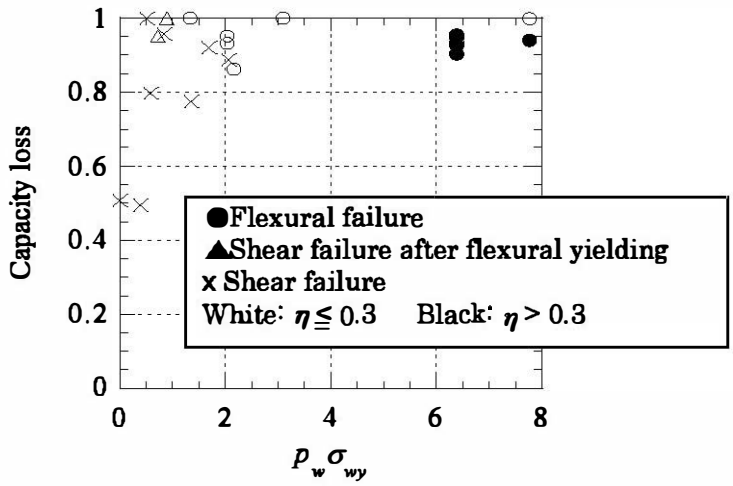


**Figure 4.2: Example of relationship between shear reinforcement amount and capacity loss**

## 5. Seismic performance and measures of rigid-frame viaducts (Civil engineering WG)

### 5.1 Introduction

Rigid-frame viaducts frequently used for railways are representative framed structures in the civil engineering field. Among the various forms of rigid frame railway viaducts, a beam-slab type, in which the slab receiving the tracks and beams are supported by columns, is most widely used. Since integrated beams and slab of this type support the tracks, horizontal members have a relatively large load-bearing capacity. For this reason, the flexural yielding of columns tends to precede under the effect of an earthquake. The civil engineering WG thus investigated the seismic performance and earthquake-resisting measures of beam-slab type rigid-frame viaducts.

### 5.2 Past earthquake damage and subjects of seismic performance verification

#### (1) Shear failure of columns

During the 1995 Hyogoken-nambu Earthquake, a number of rigid-frame viaducts collapsed as their columns underwent shear failure. Fortunately, this did not injure many people, because the earthquake struck early in the morning before the train service began. However, the serious consequences of the shear failure of the columns of rigid-frame viaducts were keenly recognized.

One of the causes of the shear failure of columns was that even structures designed in accordance with the design standards of the time did not attain the required shear capacity because of immature construction techniques. The design standards were revised later to allow for sufficient margins to avoid shear failure of columns. Nevertheless, the cross-sectional size of columns tended to remain unchanged, while shear reinforcement was significantly increased to avoid a higher cost. The resulting congested reinforcement reduced the concreting efficiency, posing problems. The reinforcement amount has recently been further increased due to increased span lengths. Adequate design has therefore become increasingly important.

Also, these problems of viaducts designed by former standards had been known to a certain extent, but earthquake-resisting measures for existing structures tended to be postponed. In the wake of the damage during the 1995 Hyogoken-nambu Earthquake, the earthquake-resisting measures moved into full implementation, with seismic retrofitting having been applied in descending order of the risk levels of structures. It is considered necessary hereafter to proceed with the strengthening of columns inferior in deformation performance due to a small shear capacity, even if shear failure is not assumed to precede, in consideration of the strength fluctuation.

**(2) Flexural failure of columns**

The 1995 Hyogoken-nambu Earthquake caused damage to columns by flexural failure in areas with large earthquake motions. Since the current design standards are also premised on damage arising due to bending during a large-scale earthquake, this kind of damage is expected in the future as well.

Under the current design standards, a column is designed by assuming the ultimate displacement to be a displacement with which it can bear a certain horizontal force while considering its plastic deformation performance. However, the ultimate displacement is established based on alternate loading tests on columns, without representing the limit point that is directly explicable from the aspect of performance verification.

Because of train traffic on the structure, the limit point for a rigid-frame viaduct should be established from the aspect of ensuring the train service. Since damage to members is premised, the repair cost for damage and residual deformation should also be considered when establishing the limit point.

Though a region with reduced capacities is incorporated in the current design standards, the assumed capacity losses are relatively small, as the reduction to the yield capacity is set as the limit. In order to more precisely consider the behavior in this region, however, it is

necessary to quantitatively evaluate the unstable behavior while the capacity decreases under repeated earthquake motion. A number of problems are left unsolved, including the necessity for considering aftershocks.

**(3) Shear failure of intermediate layers**

Damage to rigid-frame viaducts during the 1978 Miyagiken-oki Earthquake and 1995 Hyogoken-nambu Earthquake included shear failure of the intermediate layers of such viaducts (**Fig. 5.1**). It is important to investigate its handling, as it does not directly lead to collapse of the entire structure. Shear failure of an intermediate layer increases the bending moment of columns, causing concern about large deformation of the viaduct, but also suggests its role as a safety device for the structural system, as simultaneously the natural period of the structure changes and the deformability of columns increases. The possibility of such an effect has been investigated by seismic response analysis incorporating the shear failure of intermediate beams. Active investigation should be carried out on this subject.

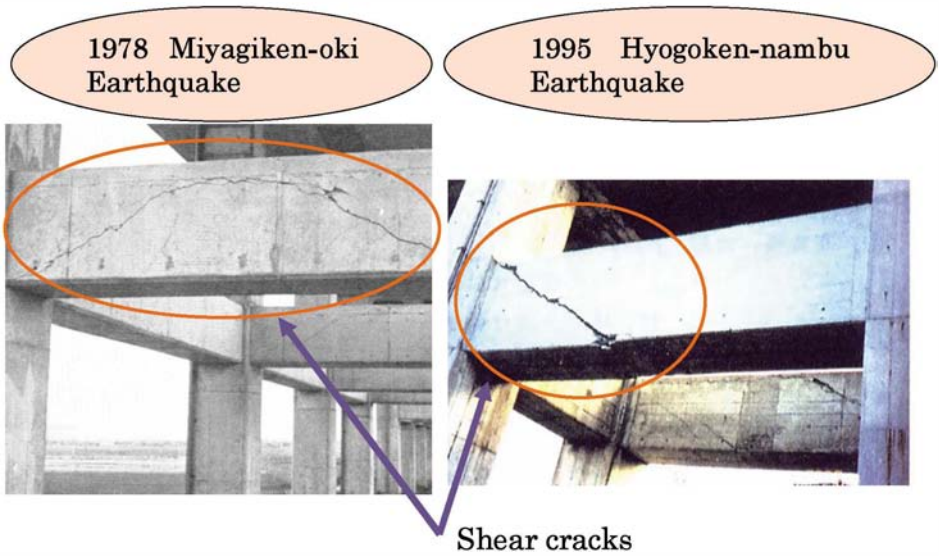


**Figure 5.1: Shear failure of intermediate beams**

**(4) Distortion of columns**

Rigid-frame viaducts may be designed in irregular shapes at elevated railway stations and intersections with roads. Such structures may cause concern about the adverse effect of distortion on columns, depending on the column rigidity and mass balance. Incidents suggesting the effect of distortion have been reported recently. The effect of column distortion on the seismic performance of rigid-frame viaducts should be investigated in the future.

### (5) Joints of members

In the currently practiced design procedure, member joints are assumed to be sufficiently rigid and not subjected to damage in most cases. However, damage to joints between beams of the upper layer and columns during an earthquake have been reported (**Fig. 5.2**). Recent studies have revealed the possibility of damage to member joints depending on the method of anchoring longitudinal reinforcing bars and the shape of joints. The verification of member joints may therefore be required in certain cases. When damage is predicted in member joints, its effects on the entire structure should also be considered.

**Figure 5.2: Damage to member joint**

### (6) Effects of non-structural members

During the 2004 Niigataken-Chuetsu Earthquake, a rigid-frame viaduct was damaged by shear failure of columns, which was presumably attributed to the effect of the slab concrete of a building under the viaduct. This suggests the necessity for appropriate consideration of the effects of equipment under viaducts, such as buildings, and non-structural members other than the main structure in the seismic diagnosis of existing structures. On the other hand, when considering the seismic retrofitting of existing structures, a possibility of utilizing slab concrete has been explored as a method of improving the load-bearing capacity of structures having insufficient load-bearing capacities. In such a case, slab concrete serves as an intermediate restrainer for the columns, eliminating the need for flexural strengthening of the columns.

### (7) Derailment

The 2004 Niigataken-Chuetsu Earthquake derailed a Shinkansen bullet train for the first

time in the history of the Shinkansen. In the seismic performance of rigid-frame items related to structural safety, such as collapse, have mostly been attracting attention, but investigation into the effect on train traffic to ensure functional safety should normally be given the first priority among the verification items. Though investigation for ensuring train traffic is certainly carried out in the current design practice, securing train traffic to a greater extent is a subject of future study.

### 5.3 Earthquake-resisting measures for rigid-frame viaducts

#### (1) Measures related to structural safety

The 1995 Hyogoken-nambu Earthquake caused the collapse of viaducts due to column shear failure, the restoration of which required a substantial amount of time. Based on the lessons from this damage, measures are being implemented, in which insufficient shearing force is supplemented for the columns of viaducts to change from shear failure mode to flexural failure mode, while improving their deformation performance. This is currently done by steel jacketing, but various other methods have also been developed and applied according to site conditions. Methods of quantitatively evaluating the load-bearing capacity and deformation performance of columns retrofitted by various methods have thus been investigated along with methods of verifying the seismic performance of viaducts after completion of earthquake-resisting measures.

#### (2) Measures for ensuring train traffic

In view of the damage causing derailment of a Shinkansen train in service during the 2004 Niigataken-Chuetsu

an earthquake are under study. Though there are limitations in ensuring train traffic solely by the structure of viaducts, it is necessary to further investigate their functional safety, which is normally most important among performance requirements for viaducts (**Fig. 5.3**).

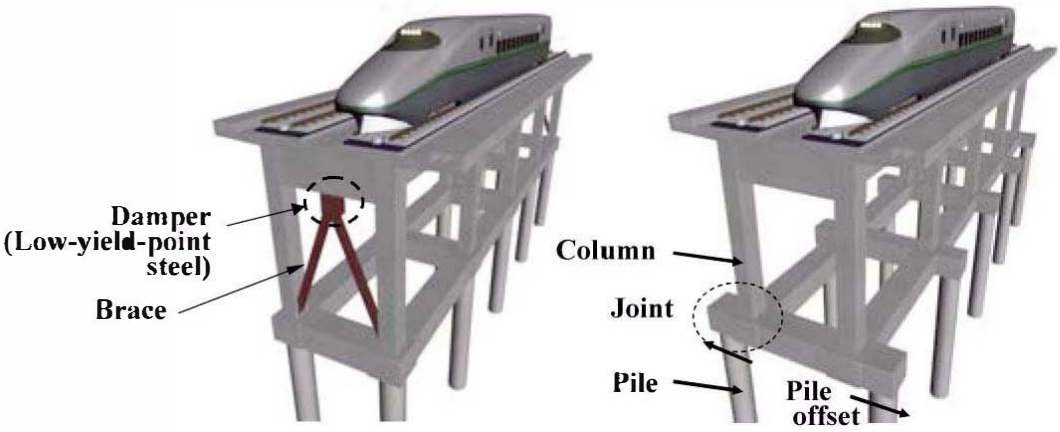


**Figure 5.3: Examples of measures to protect train traffic**

## 5.4 Current state and future prospects of seismic performance verification

Seismic design has been improved each time severe damage from an earthquake was experienced. Recent development in the seismic arrays and the elucidation of seismogenic mechanisms led to the assumption of an enormous earthquake, making it difficult to explain the seismic performance of structures by conventional static design methods, such as the permissible stress method, and specification design. The performance verification of structures based on their dynamic response has therefore become essential.

The ongoing revision of the design methods for railway structures since the 1995 Hyogoken-nambu Earthquake adopts the performance-oriented [illegible] also applied to rigid-frame viaducts. While performance verification requires that the seismic response of structures be expressed as it is, the scope of its application is limited by the current level of technology, requiring further investigation.

The goal of seismic performance verification is to develop a method of calculating the response values that is applicable to any structure and capable of expressing its behavior under any earthquake motion and a method of establishing reasonable limit values based on the performance requirements, and to carry out performance verification based on these methods. Such a method of calculating the response values would be applied to both architectural and civil engineering fields, allowing the establishment of limit values according to the function of respective structures. The problems of each structure will thus be clarified.

**Acknowledgment:**

The committee managers express their gratitude to the managers and members of each working group for their cooperation in formulating this report.

## References


1-1) K. Suzuki : Confined concrete members for seismic structures – instructions from the Hanshin earthquake disaster –, Essential of concrete techniques 1996, JCI, p.298 (in Japanese)

1-2) K. Suzuki T. Nakatsuka, K. Zhai, H. Nakada : High ductility and high recovery properties of circular confined PRC(PPC) columns, Proceedings of JCI 1986 (in Japanese)

2-1) Editorial Committee for Report on the Hanshin-Awaji Earthquake Disaster in Architectural Institute of Japan : Report on the Hanshin-Awaji Earthquake Disaster Building Series Volume 1, Structural Damage to Reinforced Concrete Building, 1999.7 (in Japanese)

2-2) M. Yoshimura, K. Iwabuchi : Nonlinear analysis of reinforced concrete building with soft first story collapsed by 1995 Hyogoken-Nanbu earthquake, J. Struct. Constr. Eng., AIJ, No. 486, pp. 75-85, Aug. 1996 (in Japanese)

2-3) Building Research Institute : Final Report on developing a rational structural system for complex facility building, March 2003 (in Japanese)

3-1) K. Mori, K. Suzuki, S. INOUE and T. Yamauchi : Experimental Study of RC Column Retrofitted by Steel Jacket with Steel Angle, Summaries of Technical Papers of Annual Meeting Architectural Institute of Japan, C-2, pp.513-514, 2006.9 (in Japanese)

4-1) H. Kuramoto : Earthquake response characteristics of equivalent sdof system reduced from multi-story buildings and prediction of higher mode responses, J. Struct. Constr. Eng., AIJ, No. 580, pp. 61-68, Jun. 2004 (in Japanese)